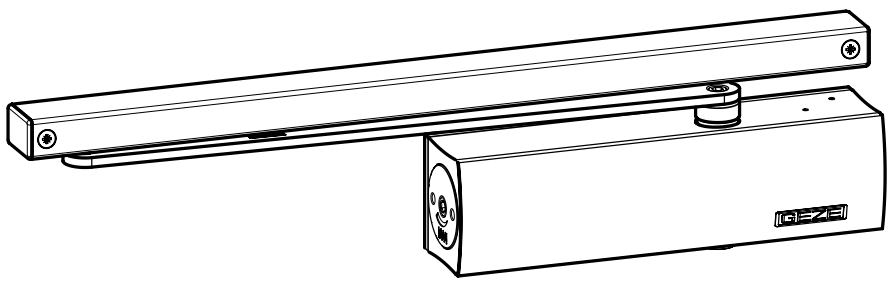

TS 3000 V
TS 3000 V BC
TS 3000 EC
TS 3000 EC BC
TS 3000 EN 3

011208-19

GEZE

A

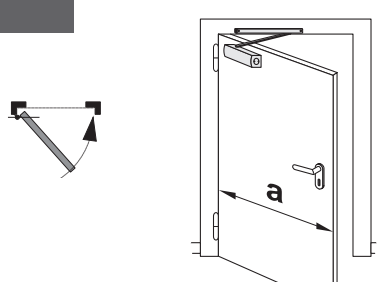

TS 3000 V a ≤ 1100 mm
TS 3000 EC / EN 3 a ≤ 950 mm

B

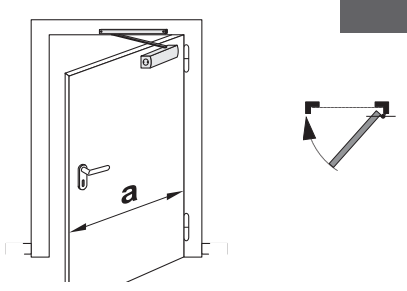

TS 3000 V a ≤ 1100 mm
TS 3000 EC / EN 3 a ≤ 950 mm

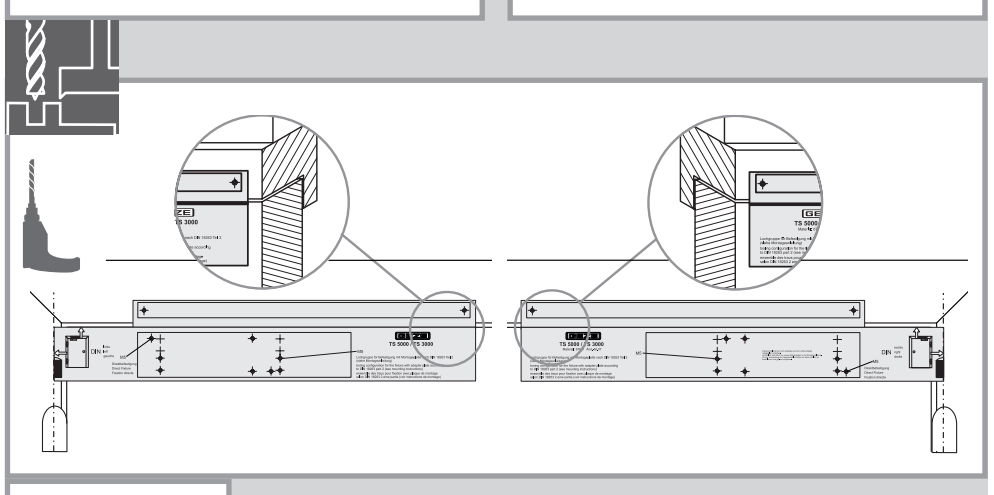

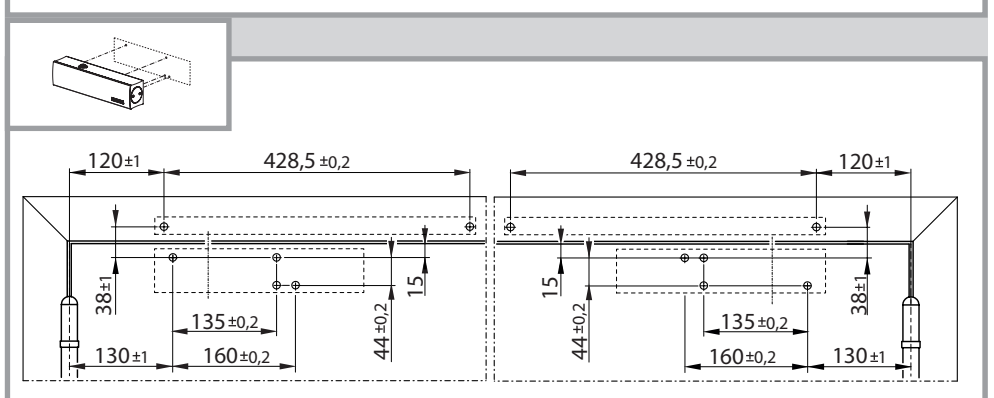

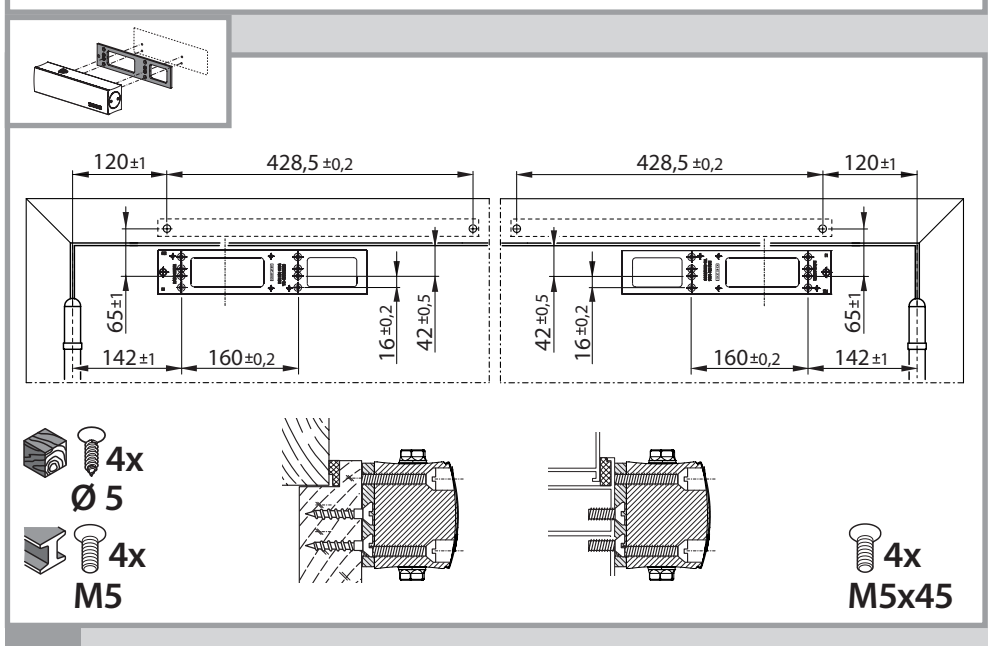

1

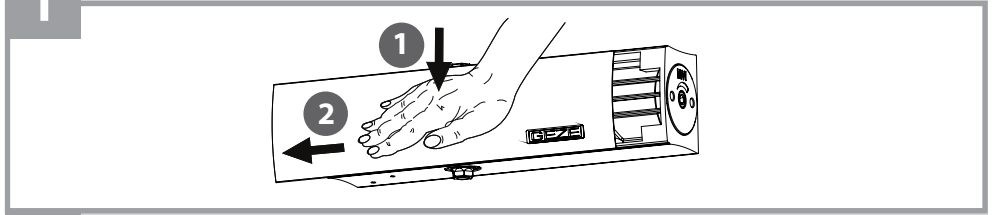

2

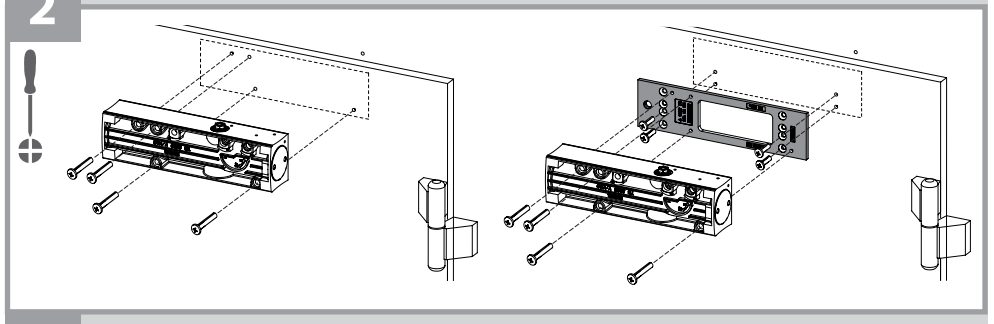

3

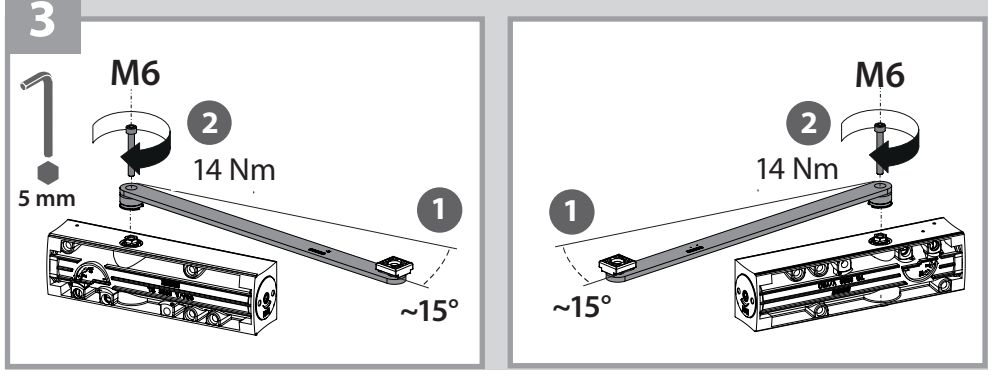

4

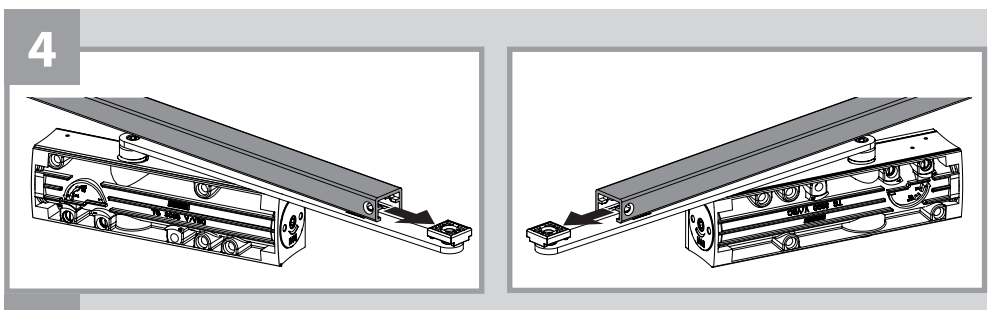

5

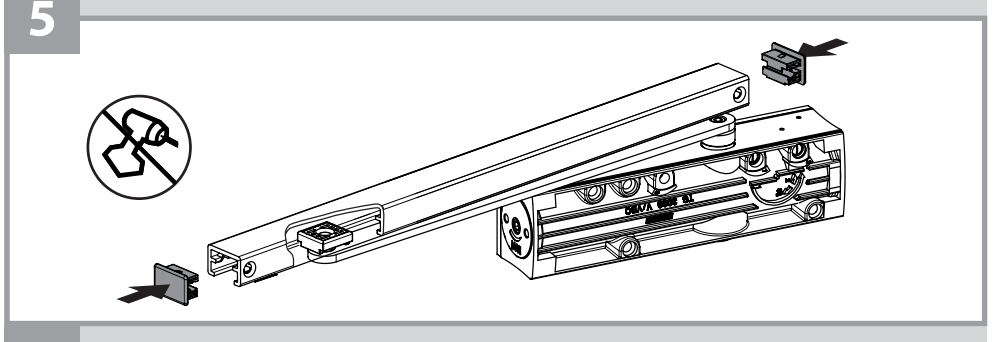

6

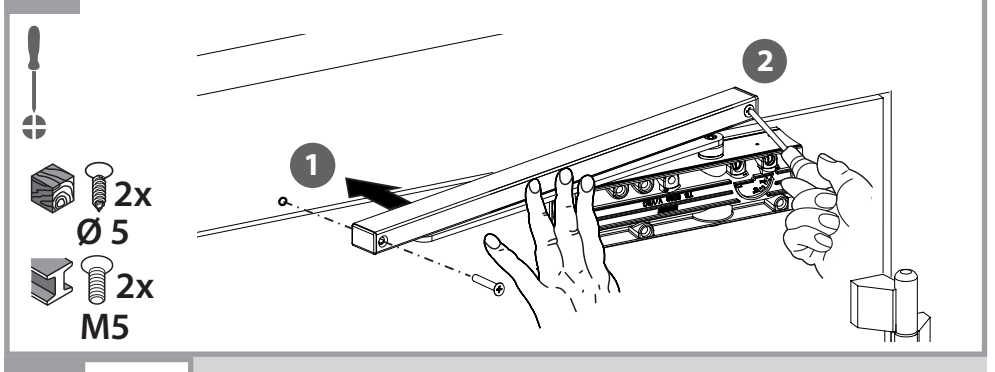

7

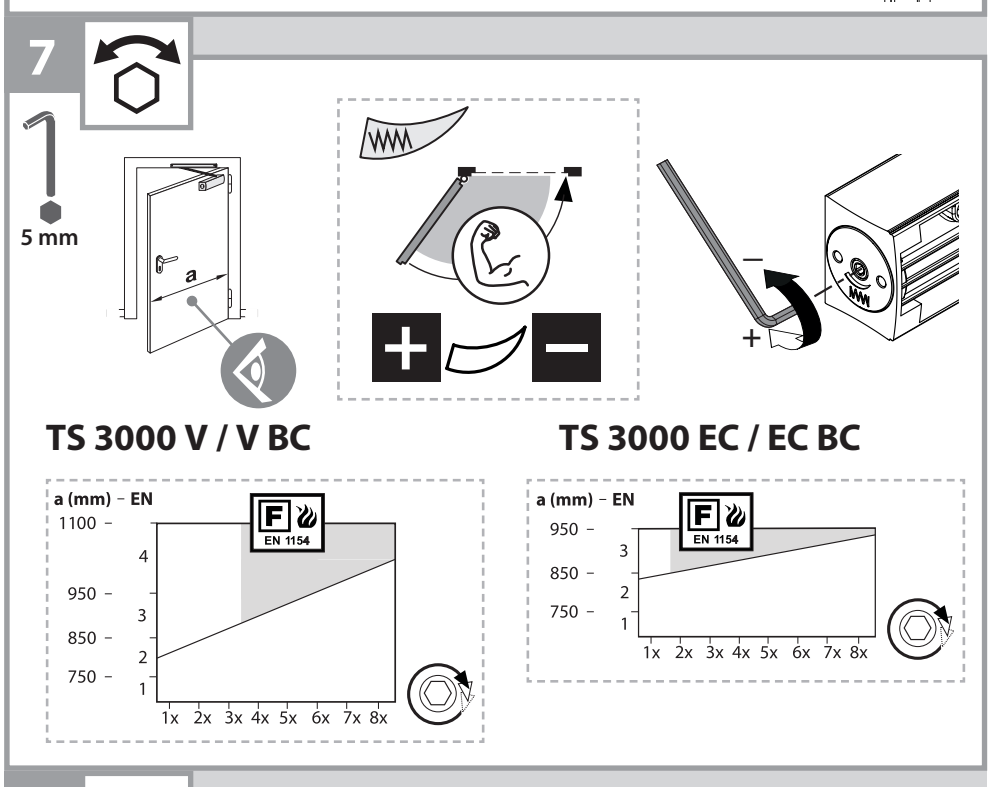

8

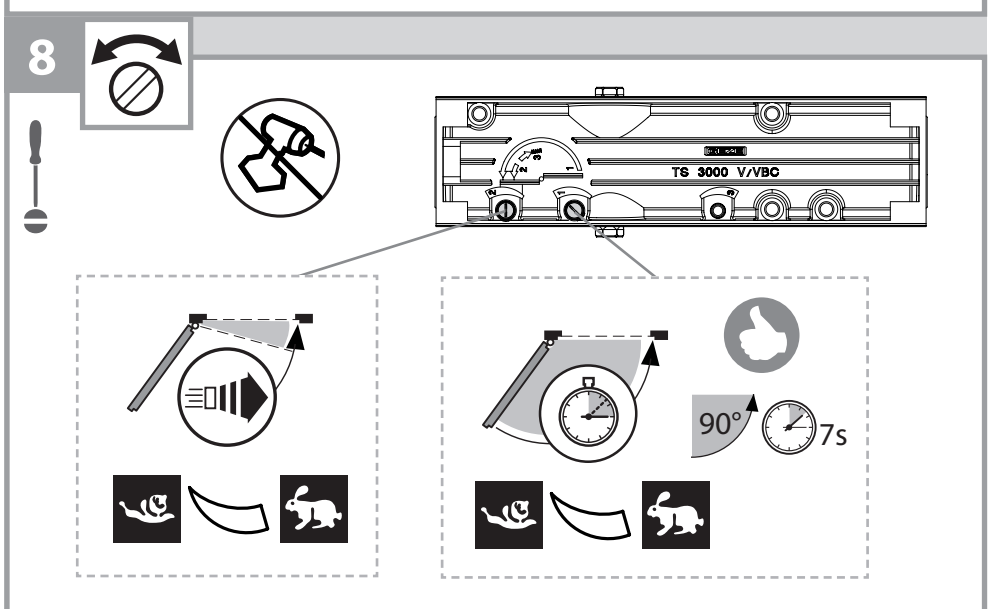

TS 3000 V BC
TS 3000 EC BC

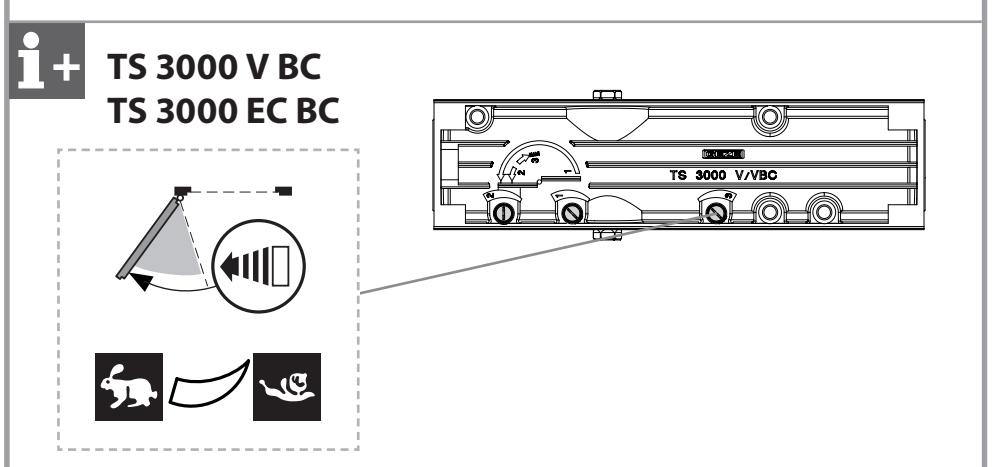

9

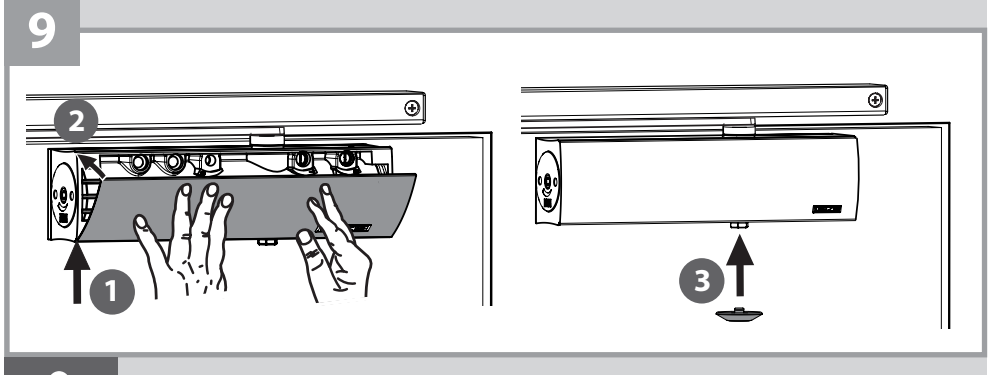

i

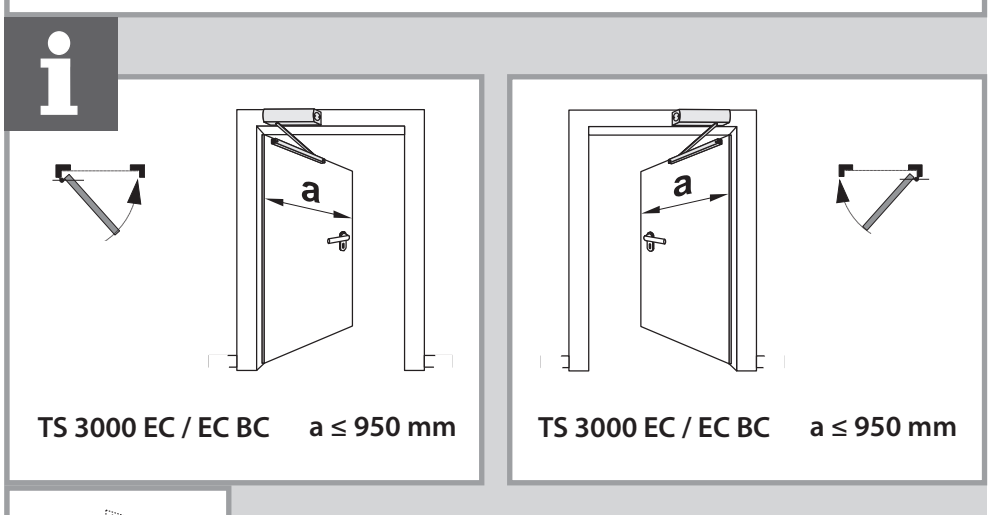

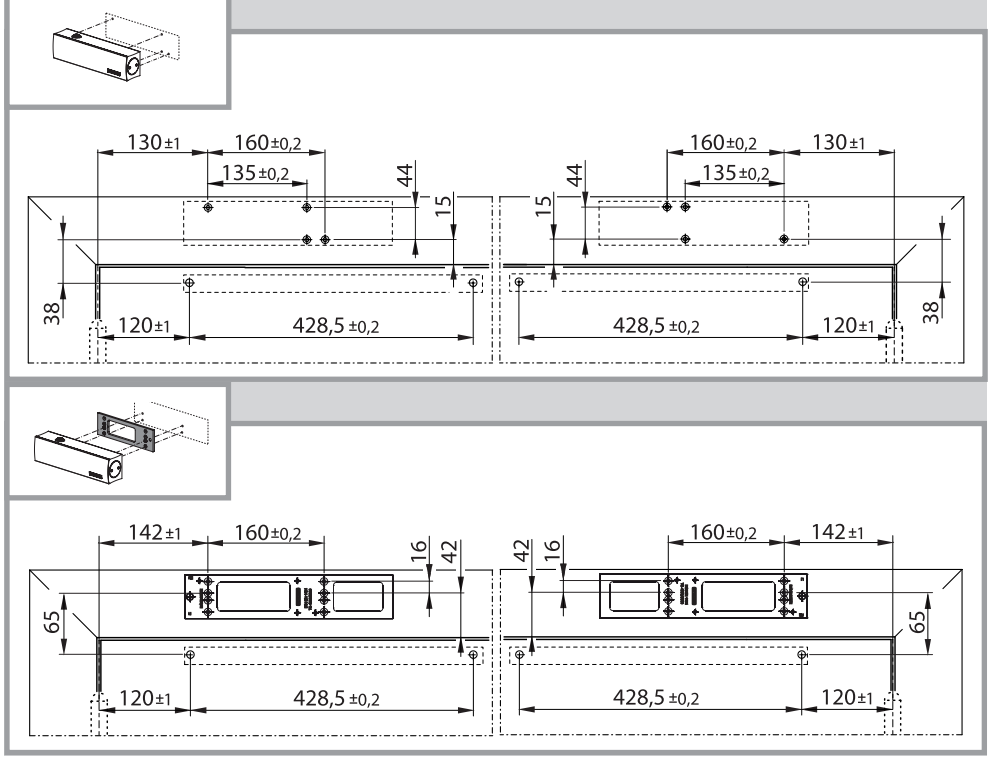

A

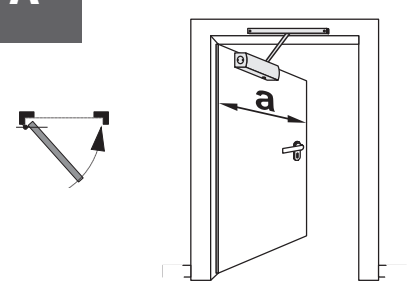

TS 3000 V a ≤ 1100 mm
TS 3000 EN 3 a ≤ 950 mm

B

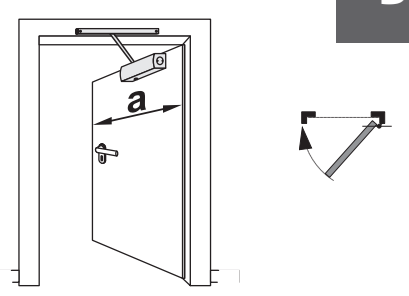

TS 3000 V a ≤ 1100 mm
TS 3000 EN 3 a ≤ 950 mm

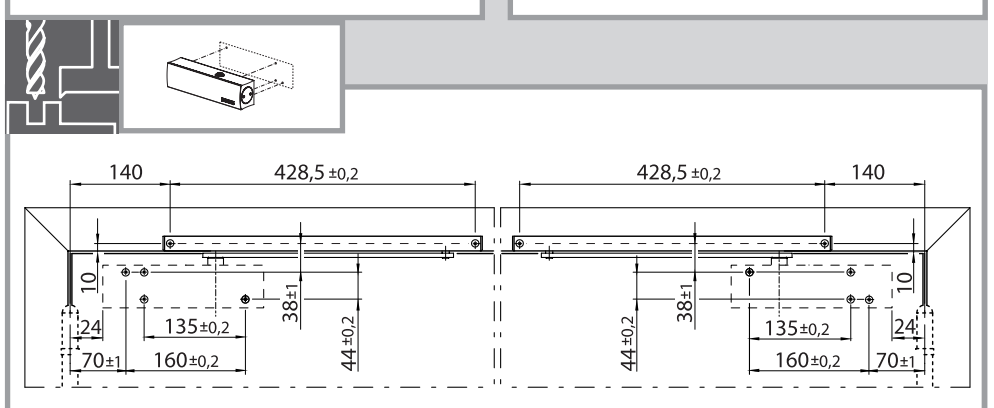

4x Ø 5
4x M5

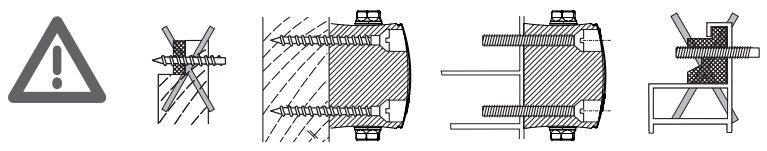

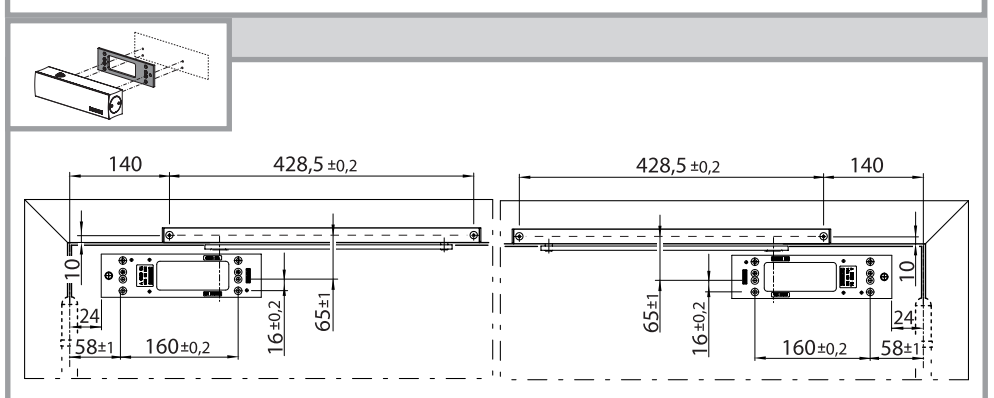

4x Ø 5
4x M5

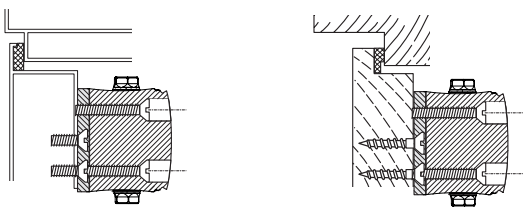

4x M5×45

1

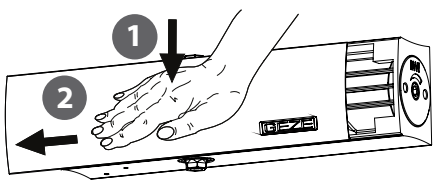

2

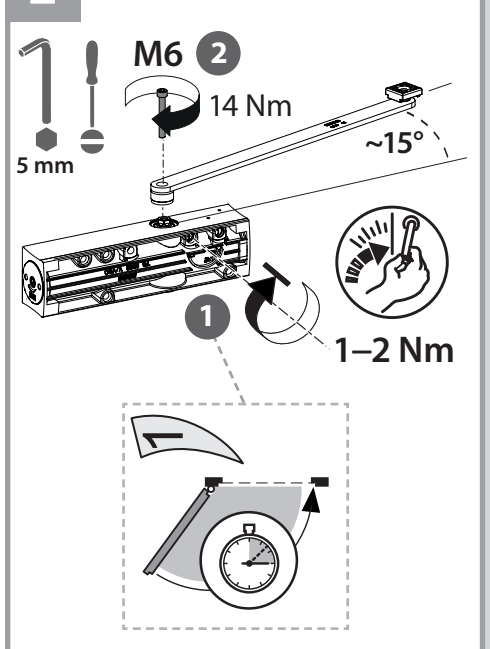

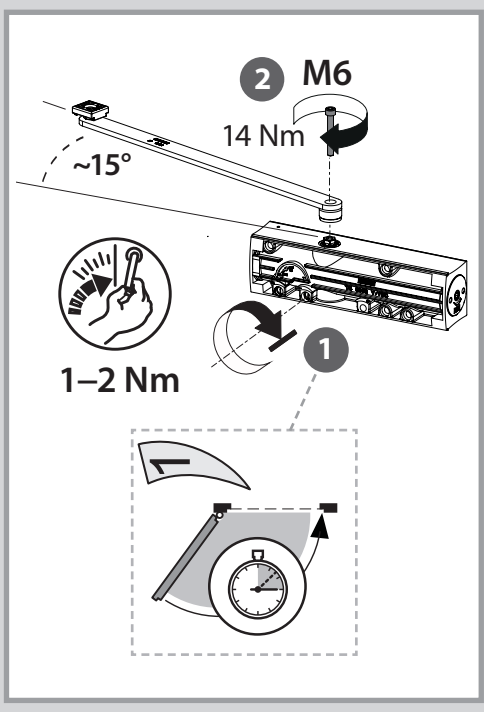

3

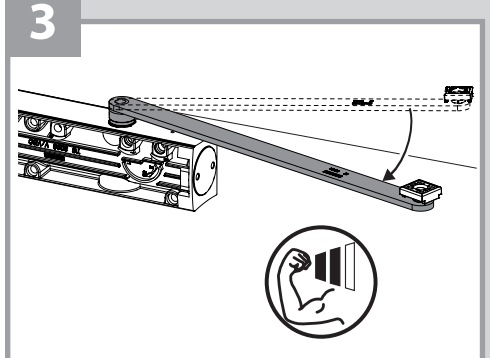

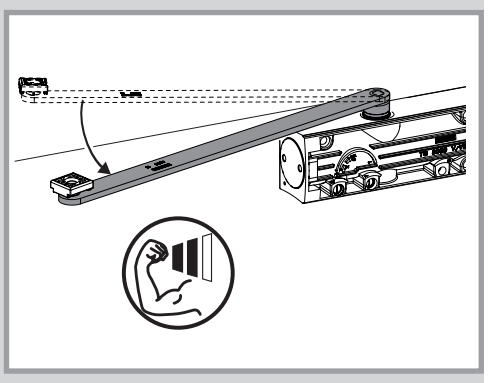

4

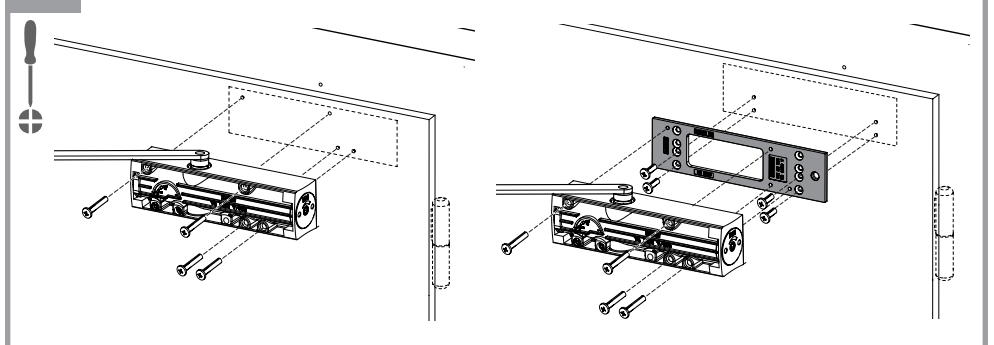

5

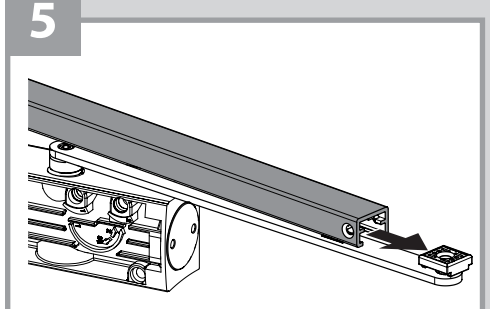

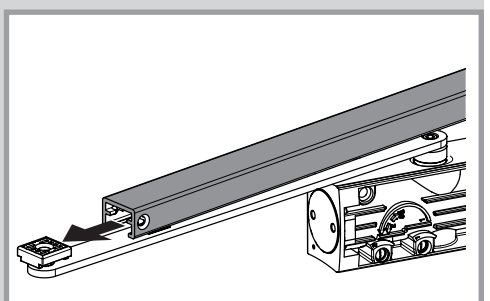

6

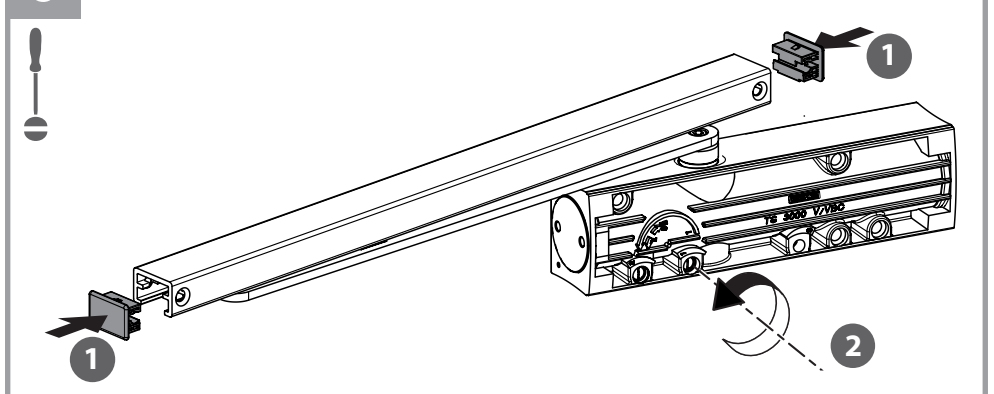

7

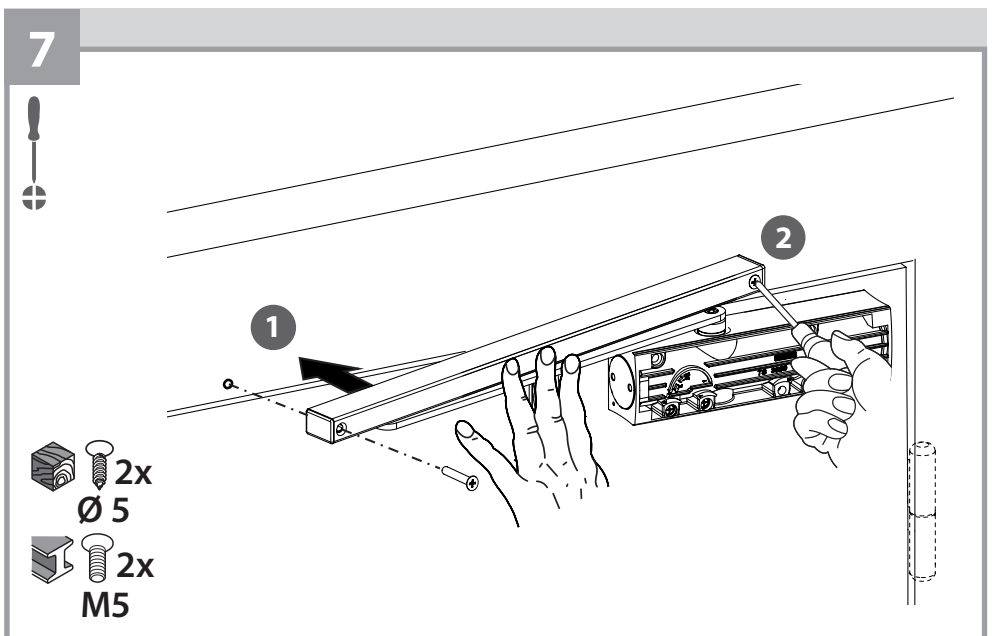

2x Ø 5
2x M5

8

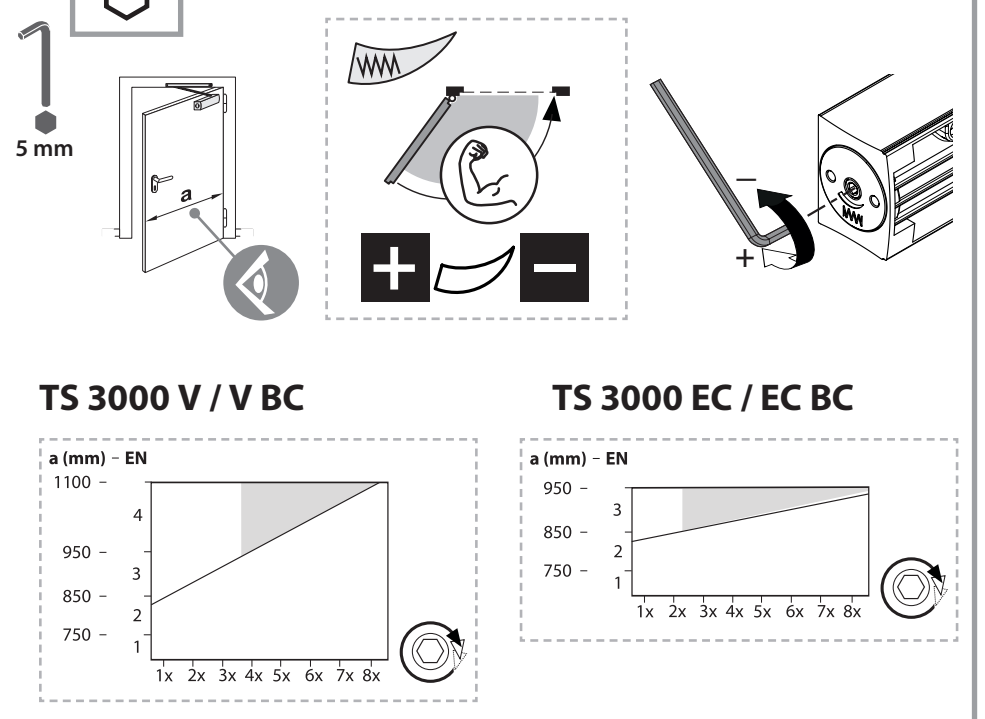

9

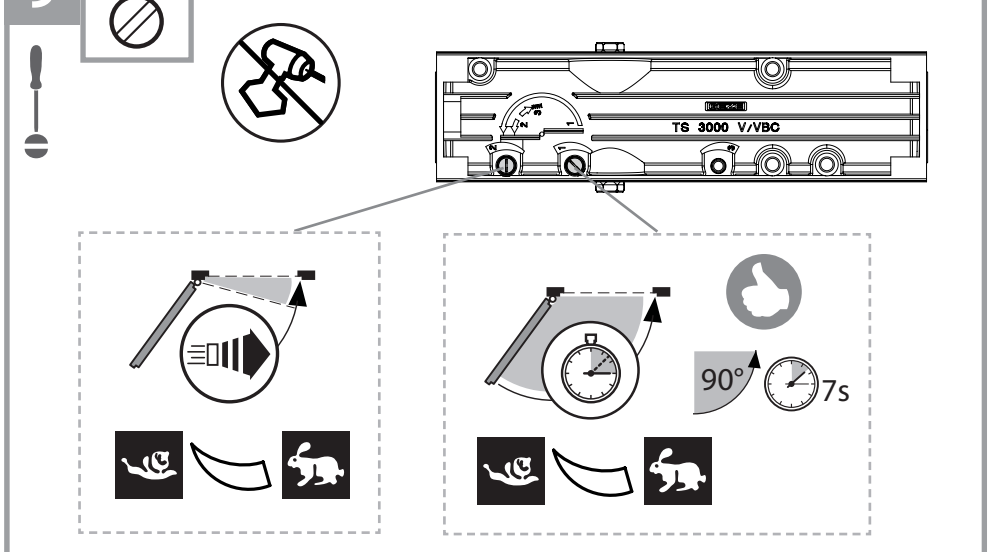

i+ TS 3000 V BC / TS 3000 EC BC

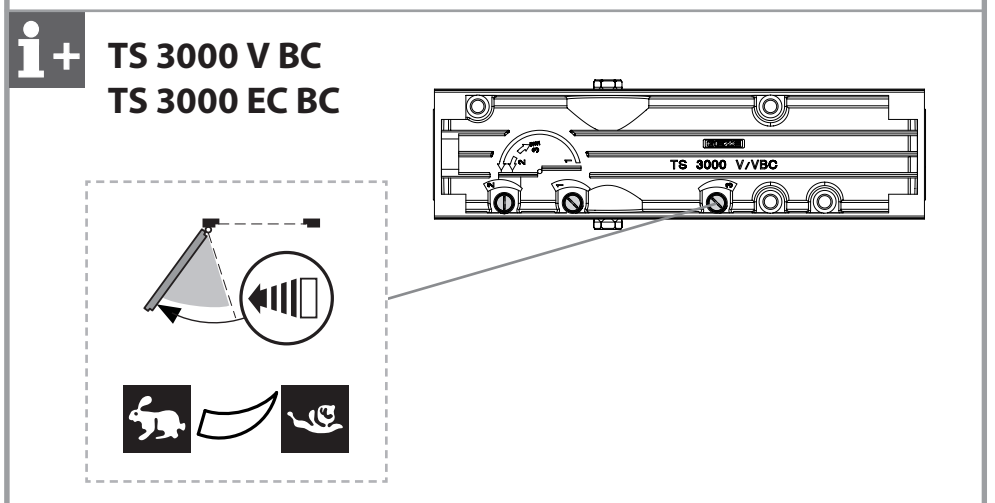

10

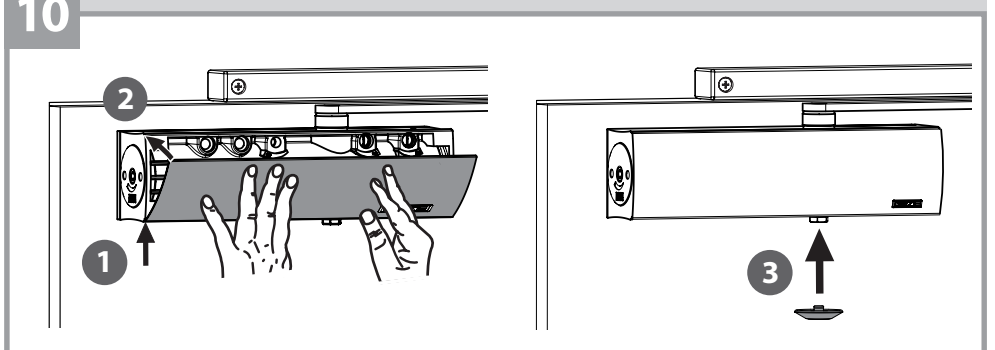

i

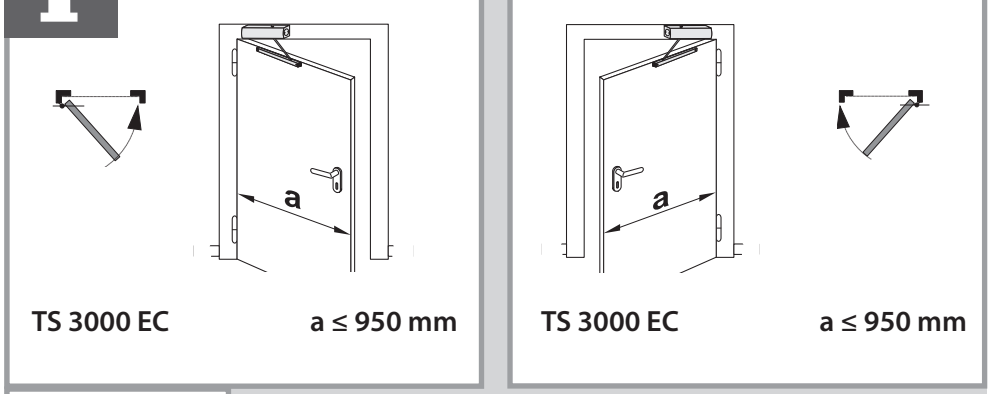

TS 3000 EC a ≤ 950 mm
TS 3000 EC a ≤ 950 mm

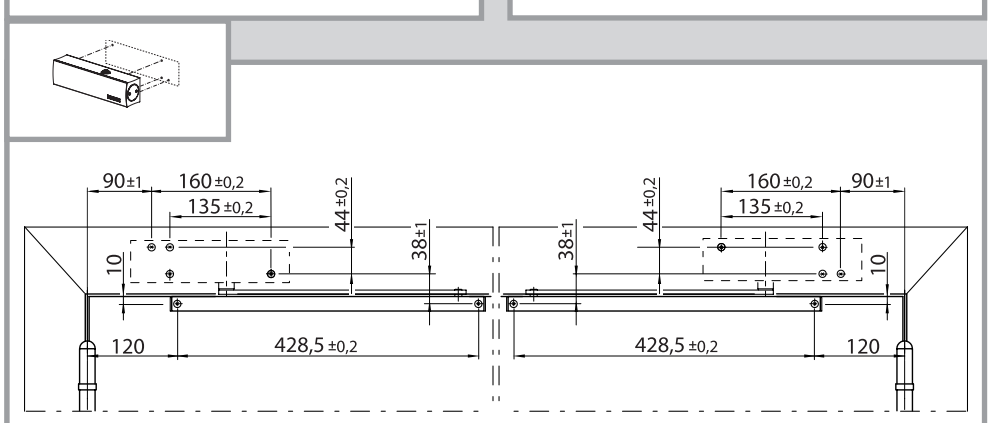

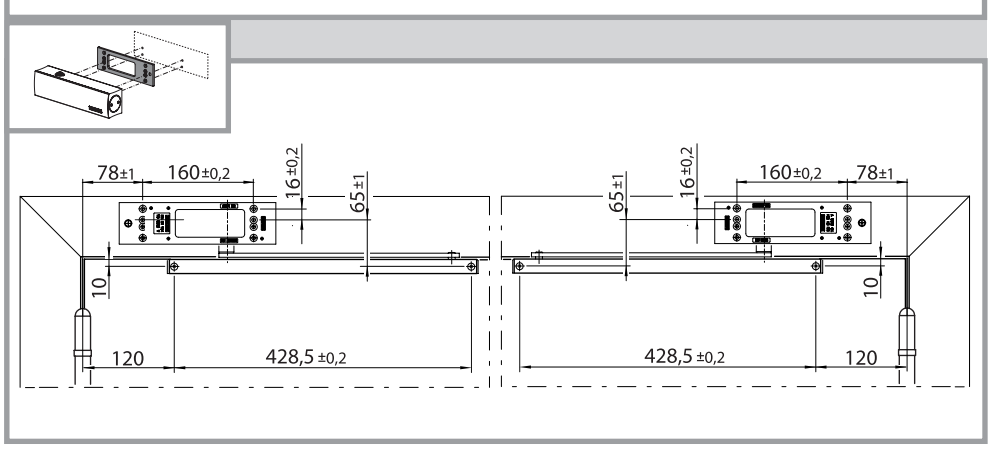

GEZE GmbH
Reinhold-Vöster-Strasse 21–29
71229 Leonberg
Germany

Tel.: 0049 7152 203-0
Fax: 0049 7152 203-310
www.geze.com